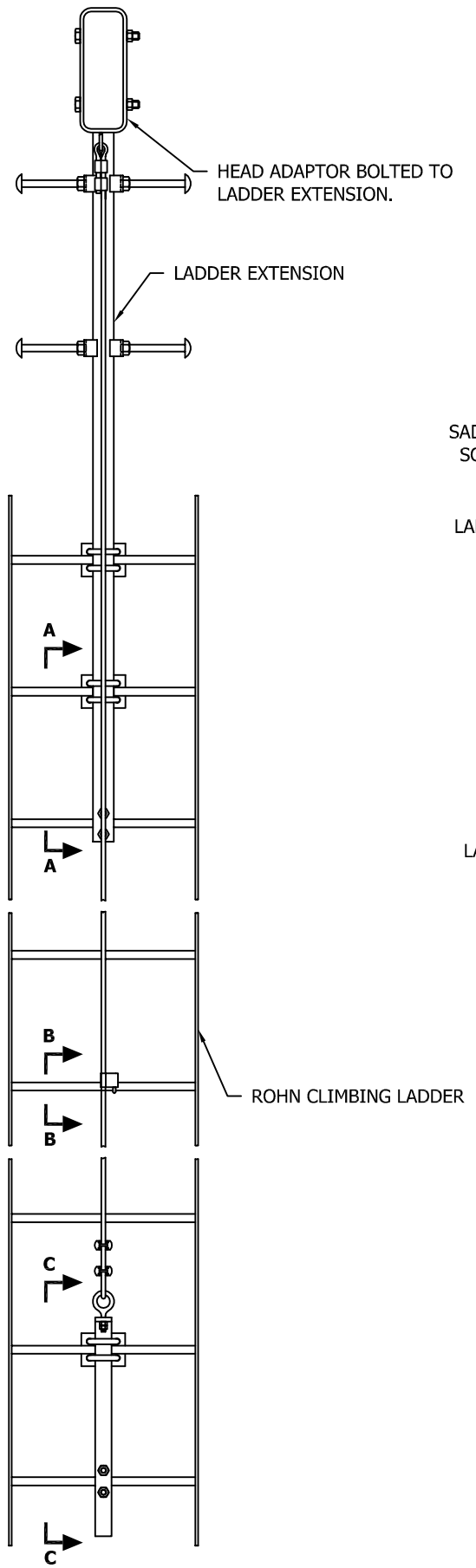

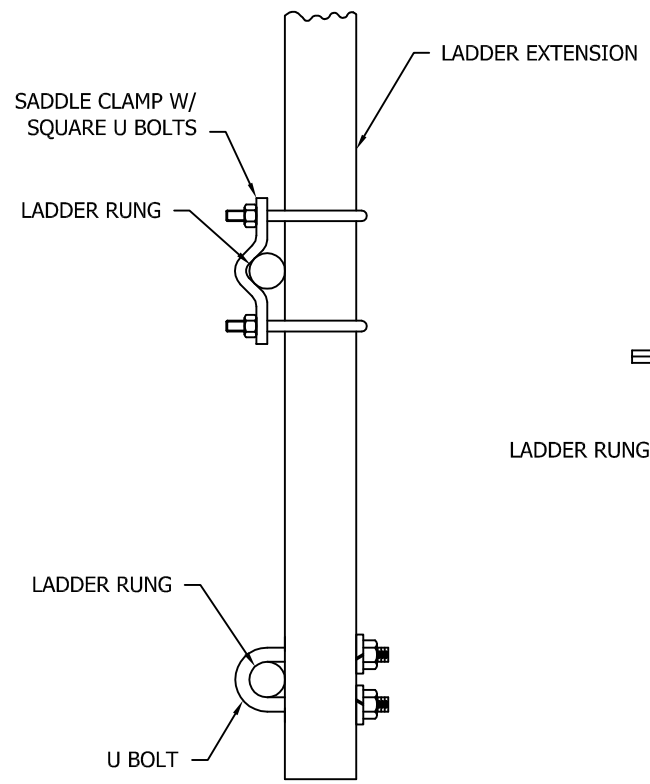

SECTION A-A

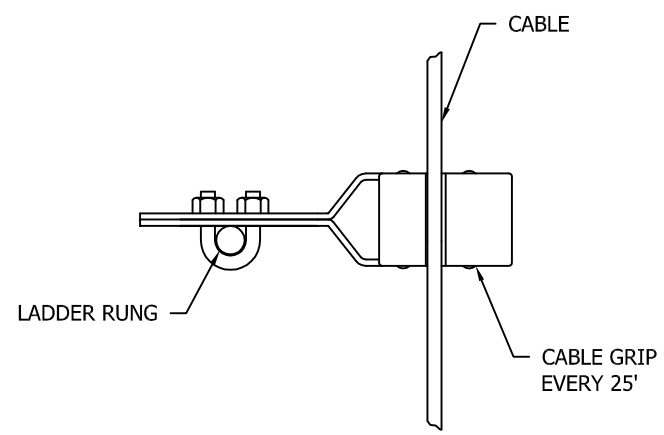

SECTION B-B

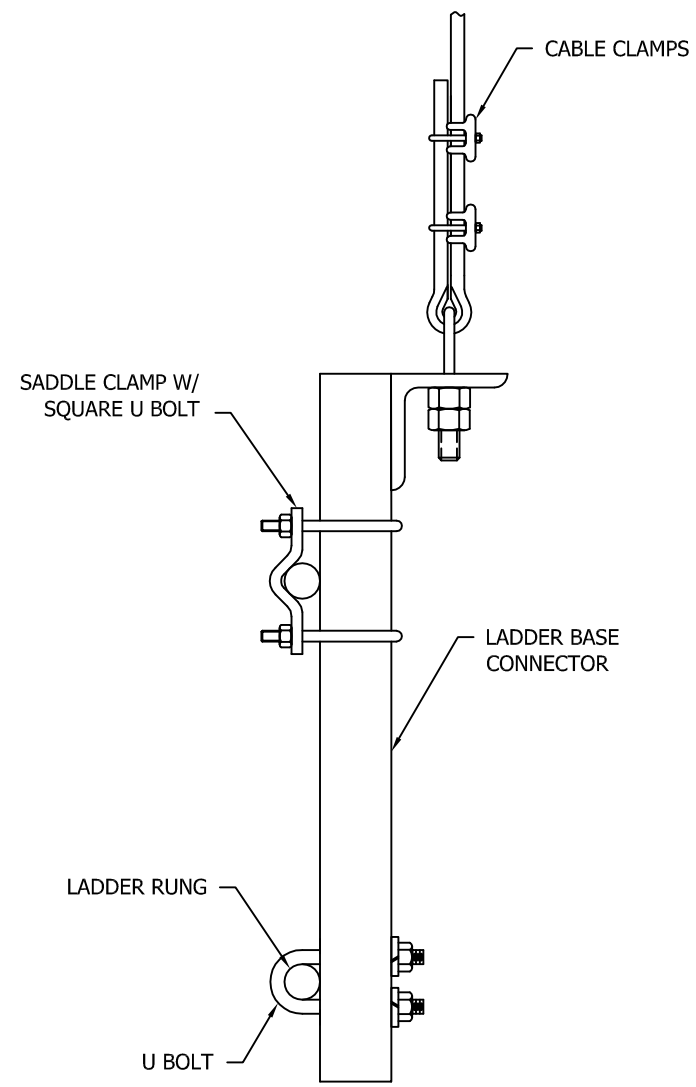

SECTION C-C

FILE NO.
Standard-SSV

REVISIONS

REV.	DESCRIPTION	DWN	CHK	APP

DWG REFERENCE

ROHN PRODUCTS LLC
PO BOX 5999
PEORIA, IL 61601-5999
TOLL FREE 800-727-ROHN

THIS DRAWING IS THE PROPERTY OF ROHN. IT IS NOT TO BE REPRODUCED, COPIED OR TRACED IN WHOLE OR IN PART WITHOUT OUR WRITTEN CONSENT.

SAFETY CLIMB
TUF TUG LADDER INSTALLATION

DWN: CHW	CHK'D: JDM	DATE: May/13/2010
ENG'R: HA		
DRAWING NO: DWG-0121		REV: 0

May/25/2010 10:47:45 AM
\Erectfon\